W-6D PLY (1/8 Die-Cut) in position to support the FITTINGS.

[F] [H] 43. Glue [1] W-21 PRE-SHAPED T.E. SHEET (3/32 x 1-3/4 x 11-3/4) and [1] W-22 PRE-SHAPED T.E. SHEET (3/32 x 1-3/4 x 5) onto the bottom rear notch's of the W-19, W-20 and W-5 RIBS.

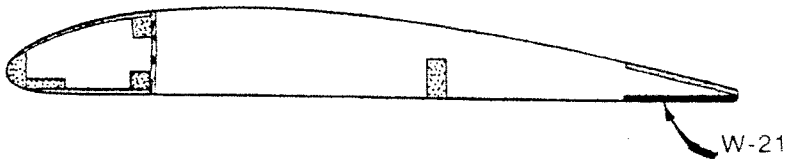

[D] 44. Trim and glue [1] W-30 TOP L.E. SHEET (3/32 x 2-1/2 x 24) in place. Cut a notch into the W-30 TOP L.E. SHEET for the NYLON STRUT FITTING to fit through.

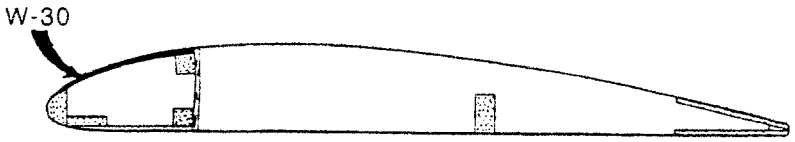

[LP] 45. Fit and glue W-52 WEBBING (3/32 x 3 x 1-1/4) between all RIBS as shown on the plan top view.

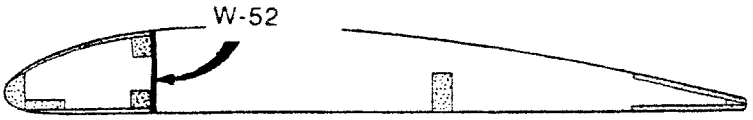

[ ] 46. Carve and sand the W-50 WING TIP BLOCK to match the outer contour of the RIBS.

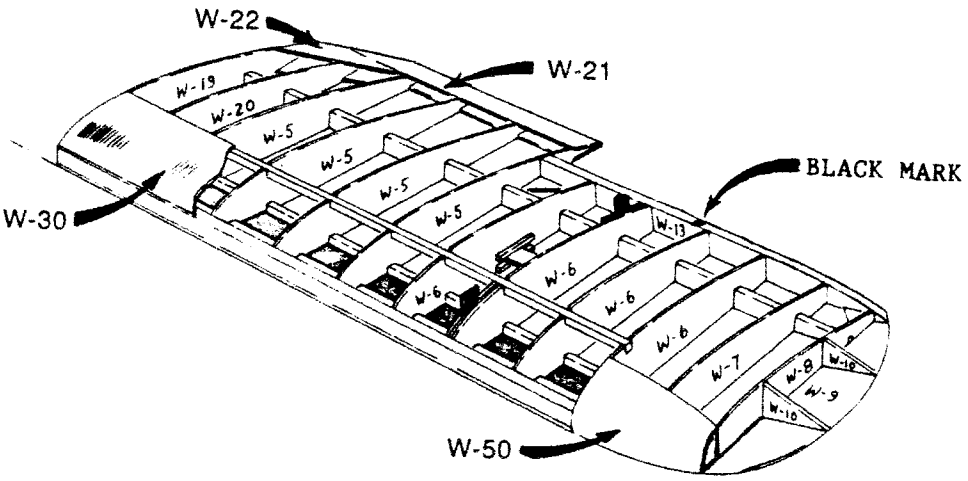

[ ] 47. Repeat steps 21 thru 46 for the BOTTOM RIGHT WING